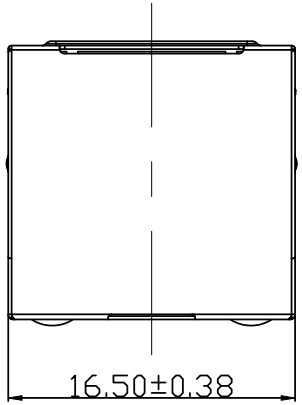

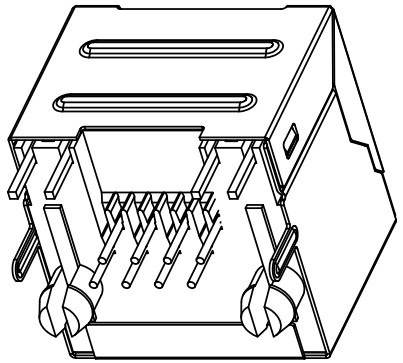

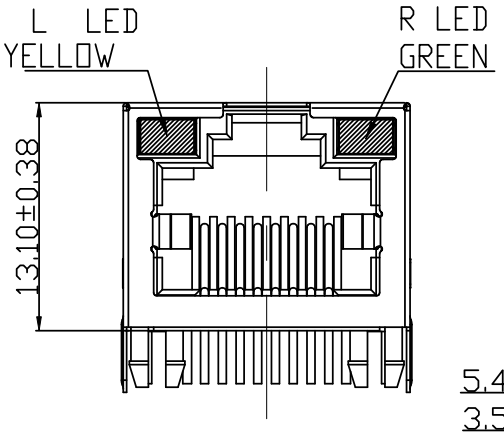

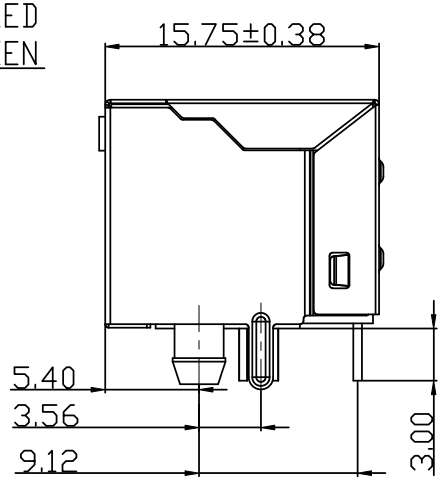

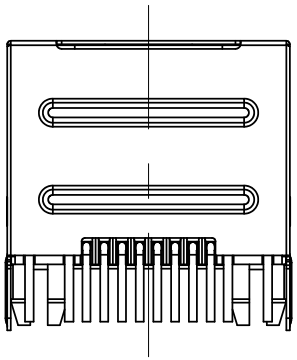

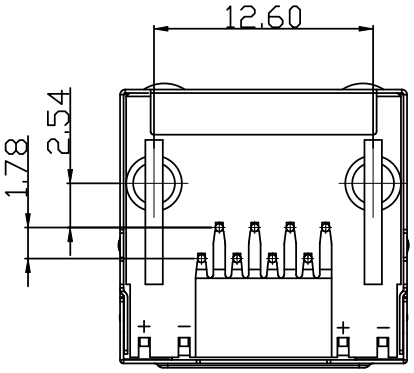

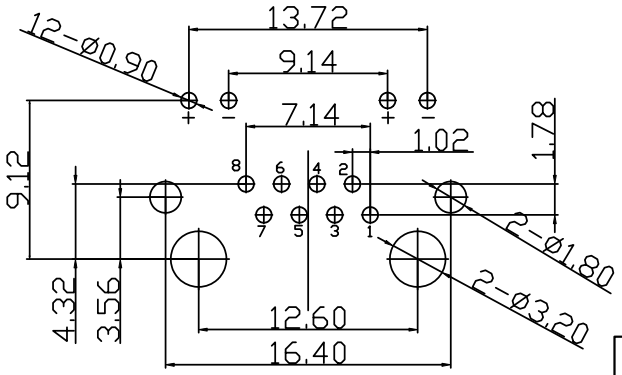

P.C.B LAYOUT(TOP VIEW)

NOTES:

1.MATERIAL:

1.1 Insulator: PBT (UL94V-0) Color:black
1.2 CONTACT: 0.46mm DIA COPPER ALLOY
1.3 SHELL:SPCC

2.SPECIFICATION:

2.1 Current Rate: 1.5 Amps
2.2 Insulator Resistance: 1000M Min. at 500V DC
2.3 Dielectric Strength: 1000V Per minute
2.4 Operation Temperature: 0°C to +70°C

PART NO.

G 0 2 - C097 - 08 003

SERIES
G=special connector
TYPE
0=other type
CONTACT TYPE
2=Through hole type

MODEL NO.

TYPE NO.
003=Type 3
CONTACT NUMBER
08=8 position

Pb Process Capable | RoHS Compliant

WALTA
華大電子股份有限公司
WALTA ELECTRONIC CO.,LTD.
TEL:886-2-26577778;FAX.886-2-26575659

REV. 版本	ECN NO. 設變號碼	MARK 記號	REVISIONS 設變內容	SIGN 修改	DATE 日期
A	EXXXX-XXX	⚠ X 0	-	zhijun	2023/6/25

UNLESS OTHERWISE SPECIFIED TOLERANCE 尺寸公差
X. ±0.50
.X ±0.25
.XX ±0.15
.XXX ±0.10
ANG. ±2°00'

CHECKED 審核
APPROVED 承認

DESIGNED 設計 zhijun 2023/6/25
DRAWN 製圖 zhijun 2023/6/25

UNIT 單位 MM
SCALE 比例 1/1
SIZE 尺寸 A4

TITLE 產品名稱: RJ45 单PORT 8P8C LED左黄右绿圆针全包
PART NO. 產品料號: G02-C097-08003
DOC. NO. 文件編號: CUT-C097-XXX
REV. 版本: A