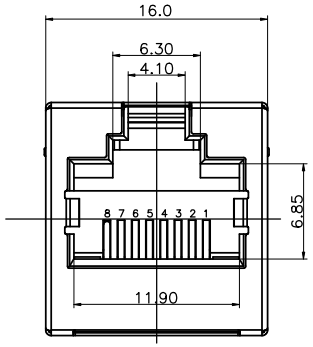

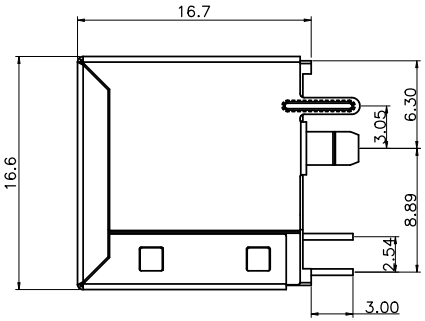

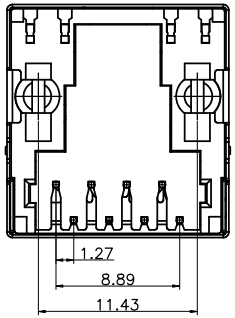

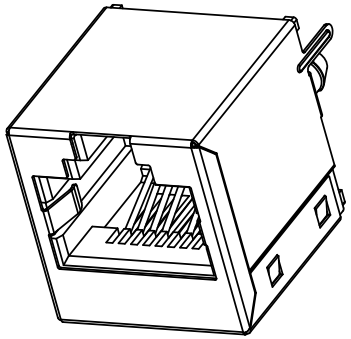

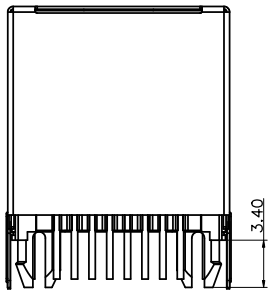

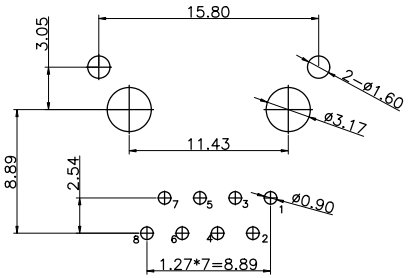

PCB LAYOUT

Electrical :

1. VOLTAGE RATING:125V AC.
2. Current Rating:1.5A
3. Insulation Resistance: 500MΩMin.@500V DC.
4. Contact Resistance: 30mΩMax
5. DIELECTRIC STRENGTH:1000V AC 50Hz or 60Hz 1MIN.

MECHANICAL :

1. INSERT MATERIAL:UL94V0.
2. CONTACT MATERIAL:DIAMETER 0.46mm C51000(QSn4-0.3) PHOSPHOR BRONZE GOID PLATING OVER NICKEL.
3. SHELL MATERIAL:SUS304-1/4H PLATING NICKEL.
4. MATING FORCE:3KG,F MAX.
5. RETENTION STRENGTH:5KG.F MIN BETWEEN JACK AND PIUG..
6. OPERATRIG LIFE:750 CYFLES MIN..

ENVIRONMENTAL:

1.STORAGE: -40~° C +85 ° C. RELATIVE HUMIDITY<70%.
1.OPERATION: -40~° C +85 ° C.

PART NO.

G 0 2 - C097 - 08 002

SERIES
G=special connector

TYPE
0=other type

CONTACT TYPE
2=Through hole type

MODEL NO.

TYPE NO.
002=Type 2

CONTACT NUMBER
08=8 position

Pb Process Capable | RoHS Compliant

WALTA
華大電子股份有限公司
WALTA ELECTRONIC CO.,LTD.
TEL:886-2-26577778;FAX.886-2-26575659

REV. 版本	ECN NO. 設變號碼	MARK 記號	REVISIONS 設變內容	SIGN 修改	DATE 日期
A	EXXXX-XXX	⚠ X 0	-	zhijun	2024/7/23

UNLESS OTHERWISE SPECIFIED TOLERANCE 尺寸公差
X. ±0.50
.X ±0.25
.XX ±0.15
.XXX ±0.10
ANG. ±2°00'

CHECKED 審核
APPROVED 承認

DESIGNED 設計 zhijun 2024/7/23
DRAWN 製圖 zhijun 2024/7/23

UNIT 單位 MM
SCALE 比例 1/1
SIZE 尺寸 A4

TITLE 產品名稱: 180度RJ45 1X1PORT 8P8C圓針全包无灯DIP
PART NO. 產品料號: G02-C097-08002
DOC. NO. 文件編號: CUT-C097-XXX
REV. 版本: A