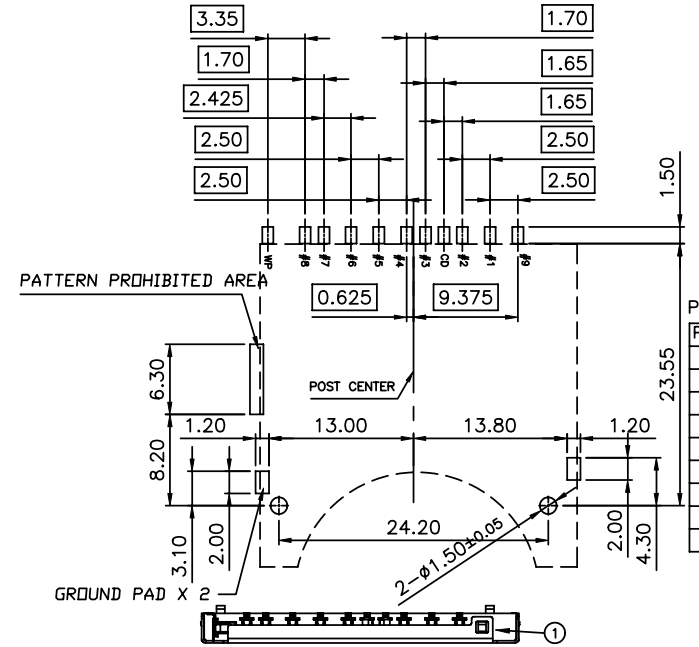

PIN DEFINE

PAD NO.	MEMORY CARD
SD-01	SD-CD/DAT3
SD-02	SD-CMD
SD-03	SD-VSS
SD-04	SD-VDD
SD-05	SD-CLK
SD-06	SD-VSS
SD-07	SD-DAT0
SD-08	SD-DAT1
SD-09	SD-DAT2

ITEM 項目	PARTS NAME 零件名稱	Q'TY 數量	MATERIAL 材質	FINISH/REMARK 處理/備註
1	HOUSING	1	SYNTHETIC RESIN	BLACK
2	SHELL	1	STAINLESS	1u"MIN. GOLD PLATING ON CONTACT TAIL
3	CONTACT-SD	1	COPPER ALLOY	5u"MIN. GOLD PLATING ON CONTACT AREA 100u"MIN. TIN PLATING 50u"MIN. NICKEL UPDERPLATING OVERALL
4	SLIDER CAM	1	SYNTHETIC RESIN	BLACK
5	CAM PIN	1	STAINLESS	–
6	SPRING	1	SWPB	–
7	DETECT CONTACT	1	COPPER ALLOY	5u"MIN. GOLD PLATING ON CONTACT AREA 100u"MIN. TIN PLATING 50u"MIN. NICKEL UPDERPLATING OVERALL
8	PROTECT CONTACT	1	COPPER ALLOY	
9	假卡	1	SYNTHETIC RESIN	BLACK

POSITION OF CARD	WITHOUT CARD	CARD INSERTED WRITE PROTECT : LOCK	CARD INSERTED WRITE PROTECT : UNLOCK
CIRCUIT	WP — GROUND CD — #3	WP — GROUND CD — #3	WP — GROUND CD — #3

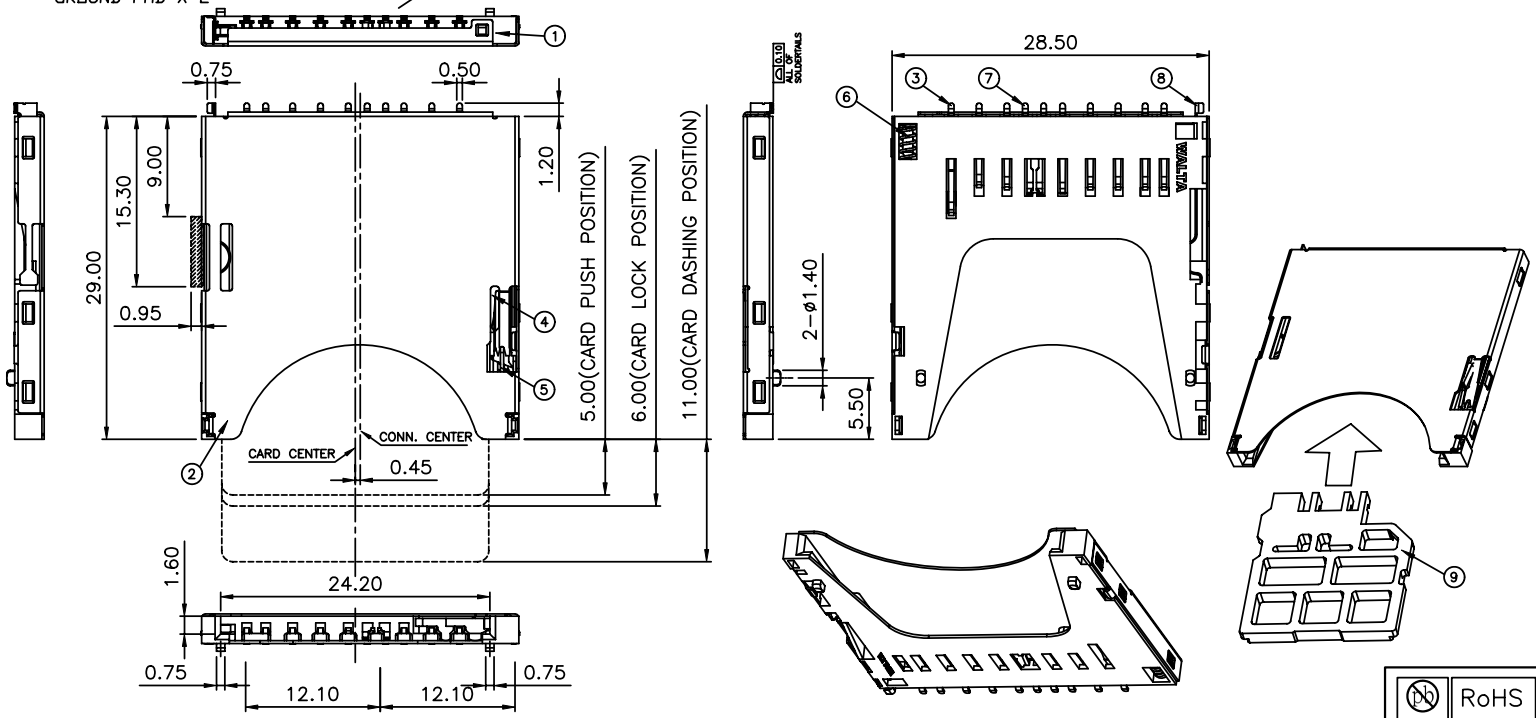

SPECIFICATION
MATERIAL
See drawing
STANDARD DATA
Rating current:0.5A
Operating temperature: -35°C ~ +85°C
Storage temperature: -40°C ~ +90°C
ELECTRICAL
Insulator resistance: 1000M ohms Min. @ 500V DC
Withstanding voltage: 500V AC/minute
Contact resistance: 100 m ohms Max.
MECHANICAL
Mating force: 13.8N(1.4kgf) Max.
Unmating force: 13.8N(1.4kgf) Max.
Durability: 10000 cycles Min.
Contact retention force: 0.98N(0.1kgf) Min
PART NO.

F 0 3 -0647 - 00 001

SERIES
F=CARD CONN.
TYPE
0=OTHER pitch
CONTACT TYPE
3=SMT type

MODEL NO.

TYPE NO.
001=Type 1
CONTACT NUMBER
00=REF. NO.

Pb Process Capable RoHS Compliant

WALTA 華大電子股份有限公司
WALTA ELECTRONIC CO.,LTD.
TEL:886-2-26577778;FAX.886-2-26575659

REV. 版本	ECN NO. 設變號碼	MARK 記號	REVISIONS 設變內容	SIGN 修改	DATE 日期
F	E1112-008	6 X 1	修正包裝數量	Zhaohua	2011/12/09
E	E1103-021	5 X 1	修正使用及保存溫度範圍	Zhaohua	2011/03/21

UNLESS OTHERWISE SPECIFIED TOLERANCE 尺寸公差
X. ±0.50
.X ±0.30
.XX ±0.20
ANG. ±5°00'

CHECKED 審核
APPROVED 承認
DESIGNED 設計 JIMMY KE 01/04/07"
DRAWN 製圖 JIMMY KE 01/04/07"

TITLE 產品名稱 SD CONNECTOR <<NORMAL TYPE~WALTA LOGO>>
UNIT 單位 MM
SCALE 比例 1/1
SIZE 尺寸 A4
PART NO. 產品料號 F03-0647-00001
DOC. NO. 文件編號 CUT-0647-001 1/2
REV. 版本 F

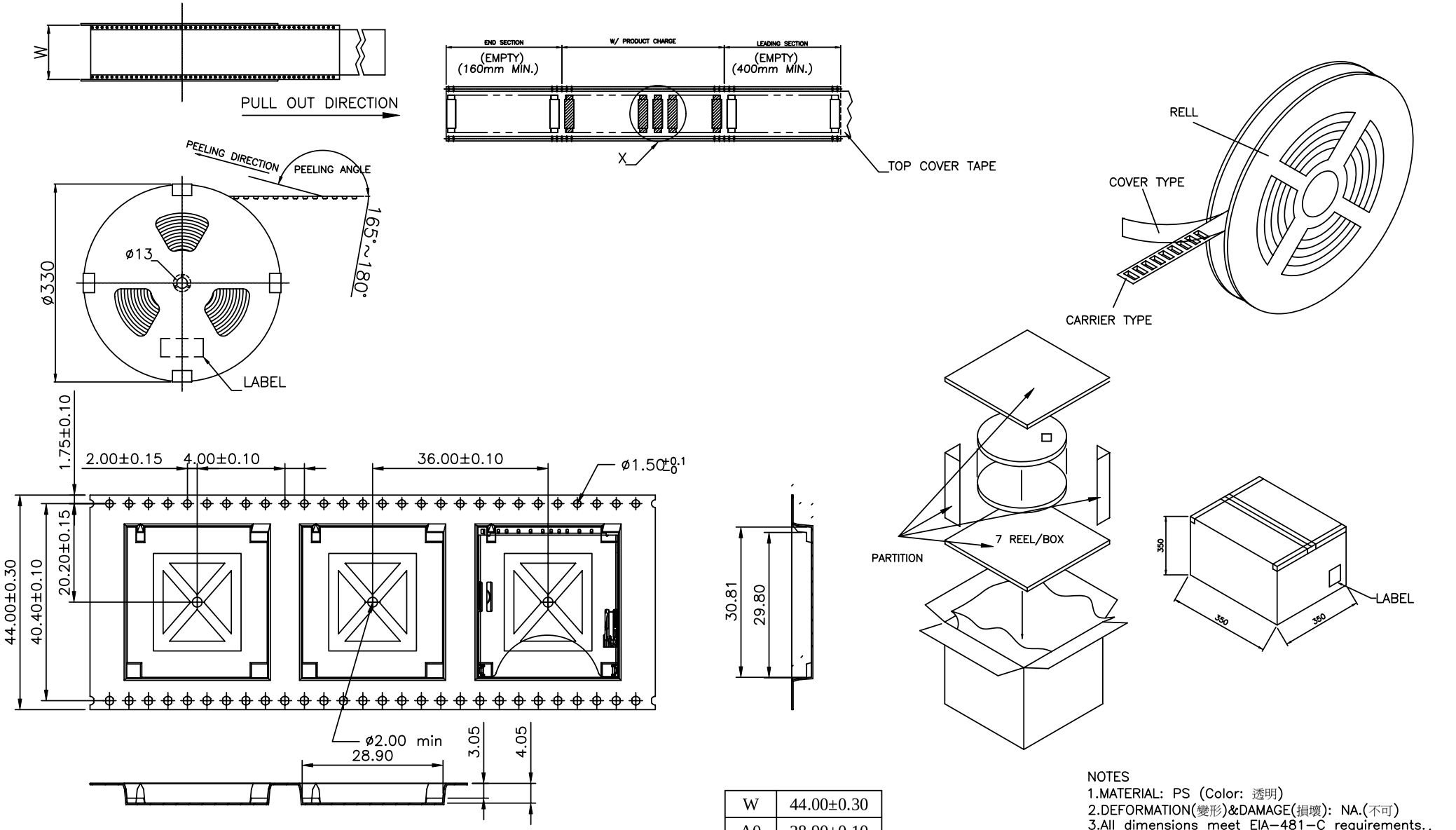

W	44.00±0.30
A0	28.90±0.10
B0	29.8±0.10
K0	4.05±0.10
K1	3.05±0.10

NOTES
1.MATERIAL: PS (Color: 透明)
2.DEFORMATION(變形)&DAMAGE(損壞): NA.(不可)
3.All dimensions meet EIA-481-C requirements.
4.PACKING: 300 PCS/REEL ; 7 PCS REEL/BOX △6

Pb Process Capable | RoHS Compliant

WALTA
華大電子股份有限公司
WALTA ELECTRONIC CO.,LTD.
TEL:886-2-26577778;FAX.886-2-26575659

REV. 版本	ECN NO. 設變號碼	MARK 記號	REVISIONS 設變內容	SIGN 修改	DATE 日期
F	E1112-008	△6 X 1	修正包裝數量	Zhaohua	2011/12/09
E	E1103-021	△5 X 1	修正使用及保存溫度範圍	Zhaohua	2011/03//21

UNLESS OTHERWISE SPECIFIED TOLERANCE 尺寸公差
X. ±0.40
.X ±0.25
.XX ±0.10
ANG. ±2°00'

CHECKED 審核
APPROVED 承認
DESIGNED 設計 JIMMY 01/04/07"
DRAWN 製圖 JIMMY 01/04/07"

UNIT 單位 MM
SCALE 比例 1/1
SIZE 尺寸 A4

TITLE 產品名稱 SD CONNECTOR <<NORMAL TYPE~WALTA LOGO>>
PART NO. 產品料號 F03-0647-00001
DOC. NO. 文件編號 CUT-0647-001 2/2
REV. 版本 F